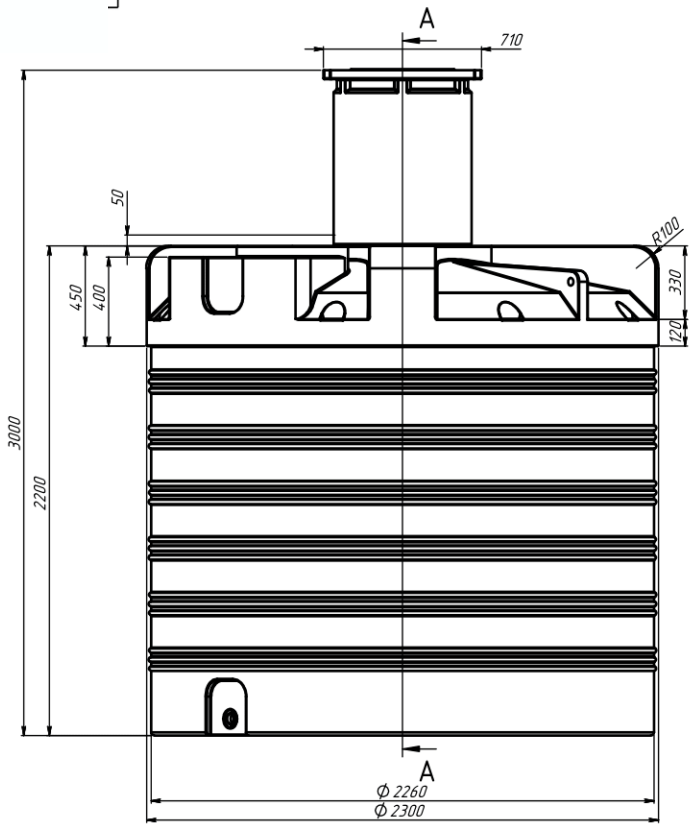

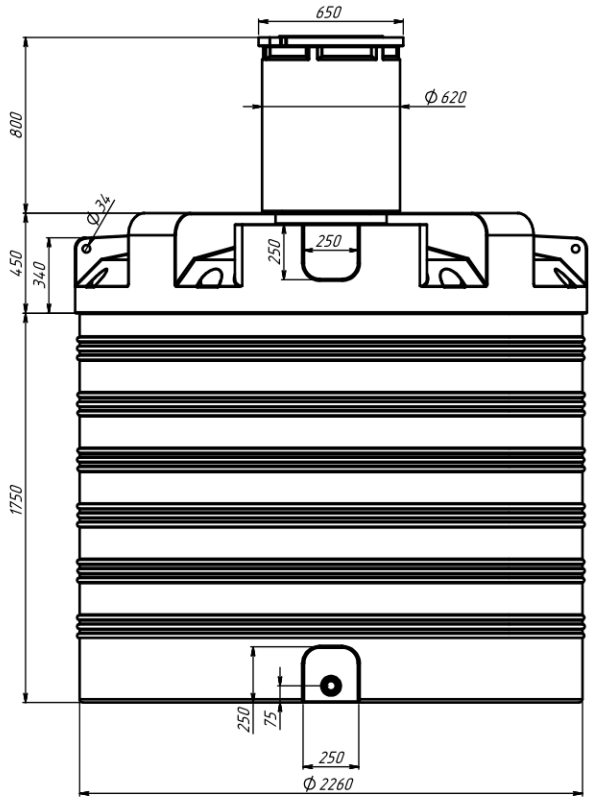

CROSS-SECTION A-A
SCALE 1:12

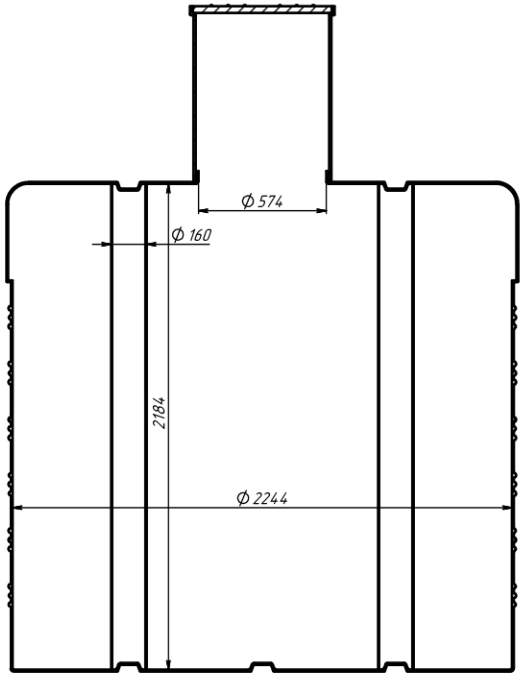

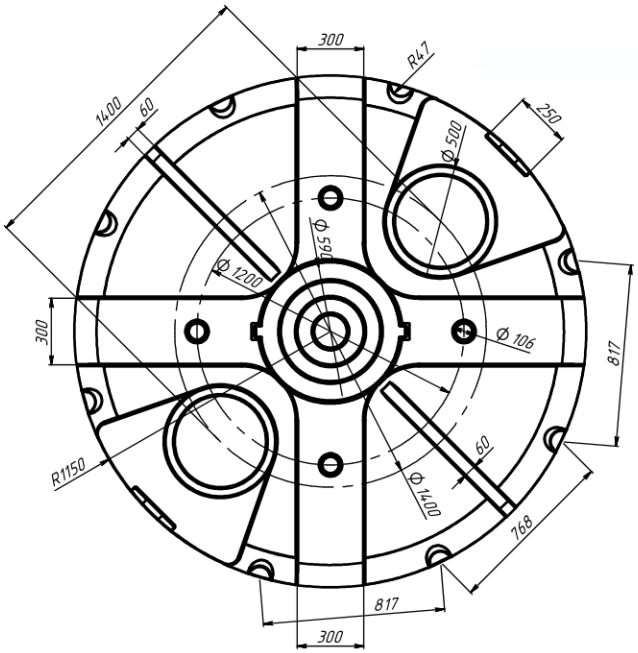

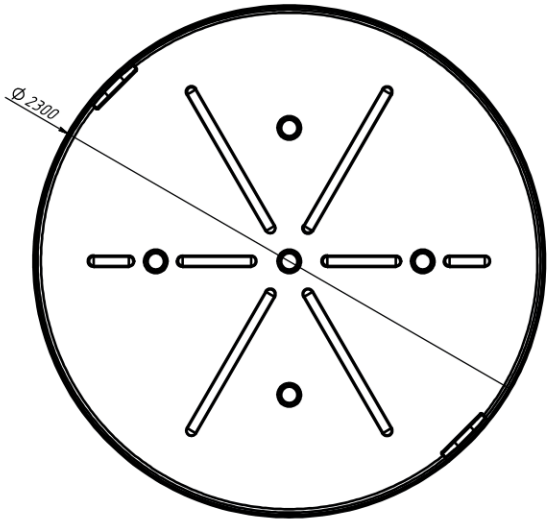

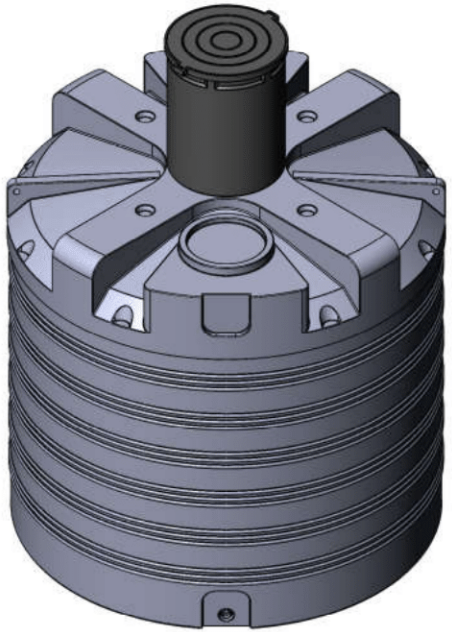

Tank V-8000U Underground	-	Scale 1:10
Polyethylene LDPE		